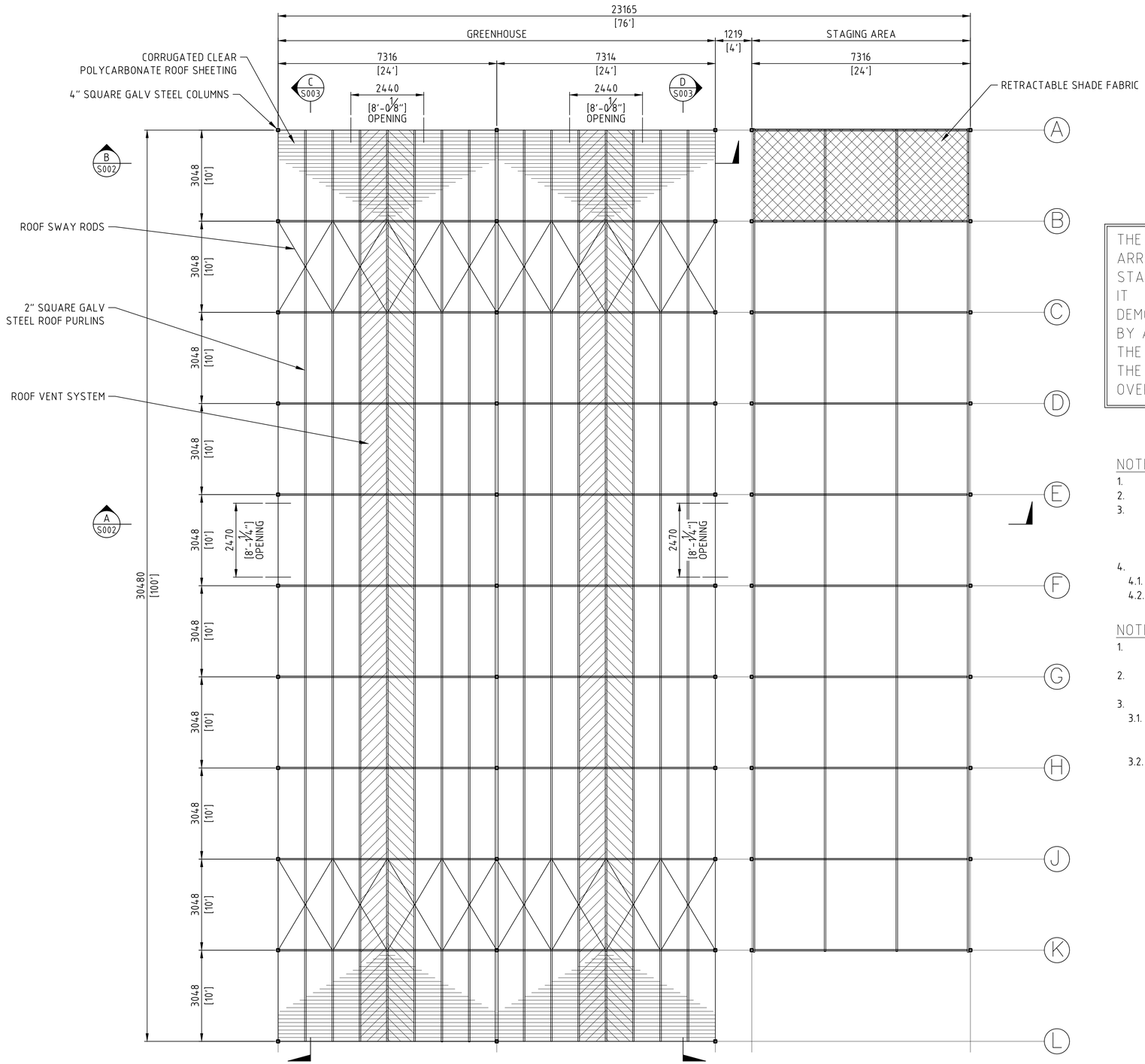

PLAN VIEW ON TULLO VALLEY GREENHOUSE

1:75

ANNEX C
Tulo Valley GH Rebuild
General Arrangement Drawings and Requirements

THE DRAWINGS WITHIN THIS PACK SHOW THE LAYOUT AND ARRANGEMENT OF THE CURRENT TULO VALLEY GREENHOUSE AND STAGING AREA.
IT IS PROPOSED THAT THE EXISTING STRUCTURES BE DEMOLISHED, AS THEY ARE IN POOR CONDITION, AND REPLACED BY A NEW, SIMILAR STRUCTURE AS DESIGNED AND SUPPLIED BY THE CHOSEN SUPPLIER/CONTRACTOR.
THE NEW STRUCTURE SHOULD MATCH THE COLUMN, HEIGHT AND OVERALL LAYOUT DIMENSIONS AS DESCRIBED.

NOTES REGARDING GREENHOUSE STRUCTURE:

1. GREENHOUSE STRUCTURE TO BE FULLY DEMOLISHED AND REPLACED.
2. EXISTING COLUMNS ARE TO BE CUT AT FOUNDATION LEVEL AS SHOWN IN SHEET S004.
3. THE NEW STRUCTURE SHOULD MATCH THE GENERAL SETTING OUT AND DIMENSIONS AS SHOWN BUT THE GOVERNMENT IS OPEN TO CONTRACTOR AND SUPPLIER DESIGN PROPOSALS.

4. DESIGN LOADS:
   - 4.1. ROOF LIVE LOAD = 30PSF
   - 4.2. DESIGN WIND SPEED = 110MPH

NOTES REGARDING STAGING AREA STRUCTURE:

1. THE STAGING AREA STEEL COLUMNS ARE IN GOOD CONDITION AND ARE EXPECTED TO BE REUSED.
2. NEW TRUSS STEELWORK AND RETRACTABLE ROOF SHADING REQUIRED.

3. DESIGN LOADS:
   - 3.1. FLAT SHADE ROOF LIVE LOAD = 10PSF (ONLY MEETS LOAD REQUIREMENTS WHEN THE SHADE SYSTEM IS IN THE RETRACTED POSITION)
   - 3.2. DESIGN WIND SPEED = 110MPH

THE MINISTRY OF PUBLIC WORKS
P.O. Box HM525
Hamilton HMCX Bermuda
Phone: (441) 295-5151

DEPARTMENT OF WORKS AND ENGINEERING

Fax: (441) 295-5658

ISSUED FOR: FOR INFORMATION

AMENDMENTS:

NO	REVISION	BY	APP	DATE
A	ISSUED FOR INFORMATION	CF	–	07/05/25

SCALE: .

SURVEY
PREPARED BY: . DATE: .

DESIGN
PREPARED BY: . DATE: .
CHECKED BY: . DATE: .

DRAWING
PREPARED BY: C FRASER DATE: 05/05/25
CHECKED BY: . DATE: .

APPROVED BY: . DATE: .

PROJECT NUMBER: .

PROJECT NAME:
TULO VALLEY GREENHOUSE

PEMBROKE

SHEET TITLE:
GENERAL ARRANGMENT AND NOTES

SHEET NUMBER: S001
REVISION: A

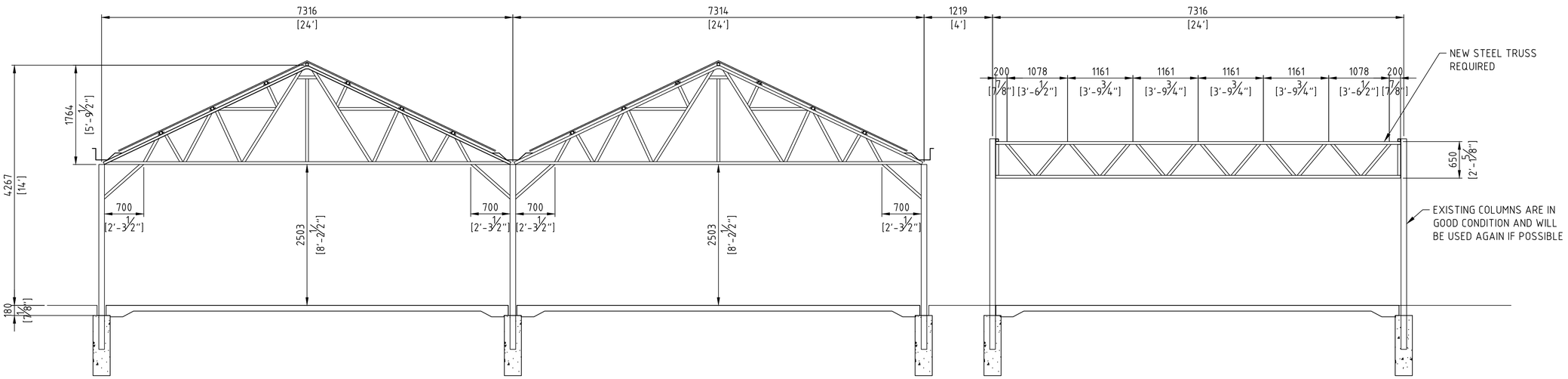

VIEW A-A
TYPICAL FRAME
1:40

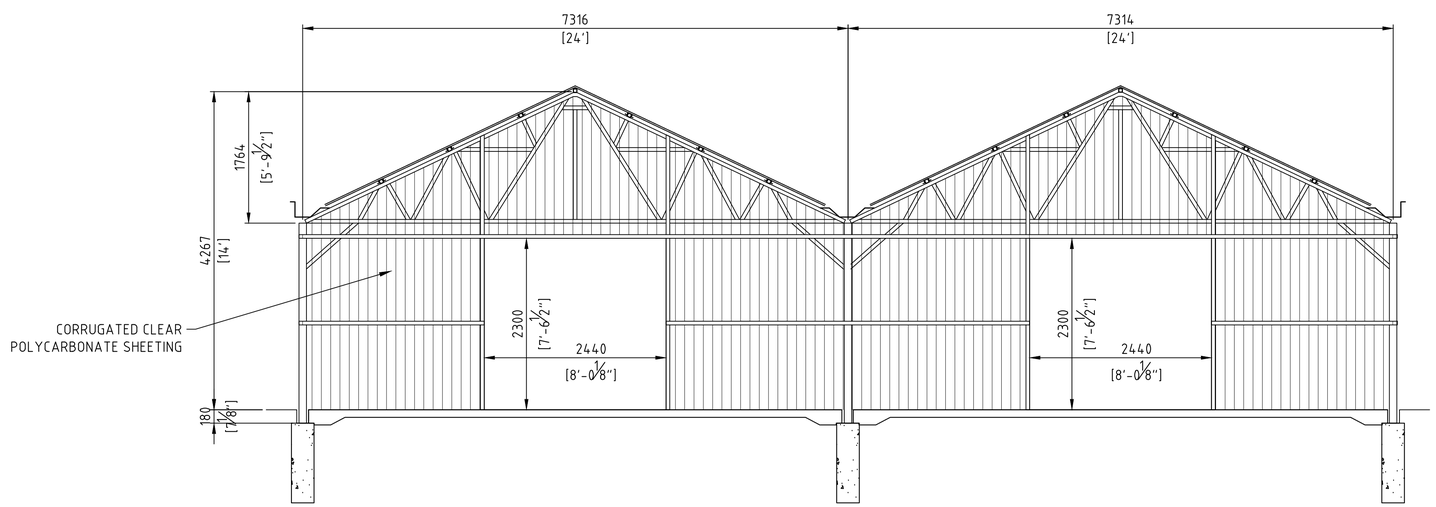

VIEW B-B
GABLE END FRAME
1:40

THE MINISTRY OF PUBLIC WORKS

P.O. Box HM525
Hamilton HMCX Bermuda
Phone: (441) 295-5151

DEPARTMENT OF WORKS AND ENGINEERING

Fax: (441) 295-5658

ISSUED FOR: FOR INFORMATION

AMENDMENTS:

NO	REVISION	BY	APP	DATE
A	ISSUED FOR INFORMATION	CF	–	07/05/25

SCALE: .

SURVEY
PREPARED BY: . DATE: .

DESIGN
PREPARED BY: . DATE: .
CHECKED BY: . DATE: .

DRAWING
PREPARED BY: C FRASER DATE: 05/05/25
CHECKED BY: . DATE: .
APPROVED BY: . DATE: .

PROJECT NUMBER: .

PROJECT NAME:
TULO VALLEY GREENHOUSE

PEMBROKE

SHEET TITLE:
ELEVATION VIEWS SHEET 1

SHEET NUMBER: S002
REVISION: A

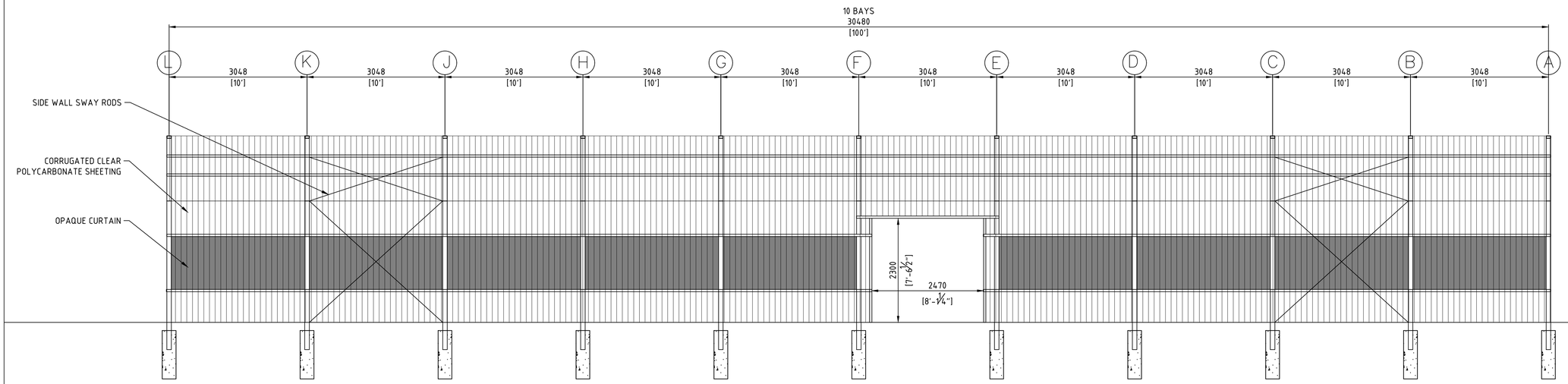

VIEW C-C
SIDE ELEVATION
1:50

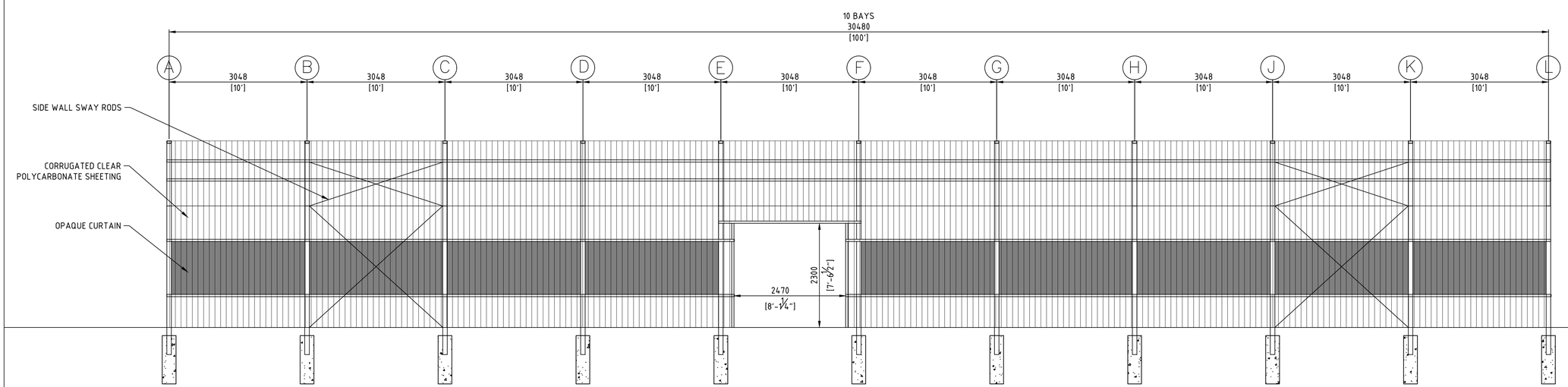

VIEW D-D
SIDE ELEVATION
1:50

THE MINISTRY OF PUBLIC WORKS

P.O. Box HM525
Hamilton HMCX Bermuda
Phone: (441) 295-5151

DEPARTMENT OF WORKS AND ENGINEERING

Fax: (441) 295-5658

ISSUED FOR: FOR INFORMATION

AMENDMENTS:

NO	REVISION	BY	APP	DATE
A	ISSUED FOR INFORMATION	CF	–	07/05/25

SCALE: .

SURVEY
PREPARED BY: . DATE: .

DESIGN
PREPARED BY: . DATE: .
CHECKED BY: . DATE: .

DRAWING
PREPARED BY: C FRASER DATE: 05/05/25
CHECKED BY: . DATE: .

APPROVED BY: . DATE: .

PROJECT NUMBER: .

PROJECT NAME:

TULO VALLEY GREENHOUSE

PEMBROKE

SHEET TITLE:

ELEVATION VIEWS SHEET 2

SHEET NUMBER: S003

REVISION: A

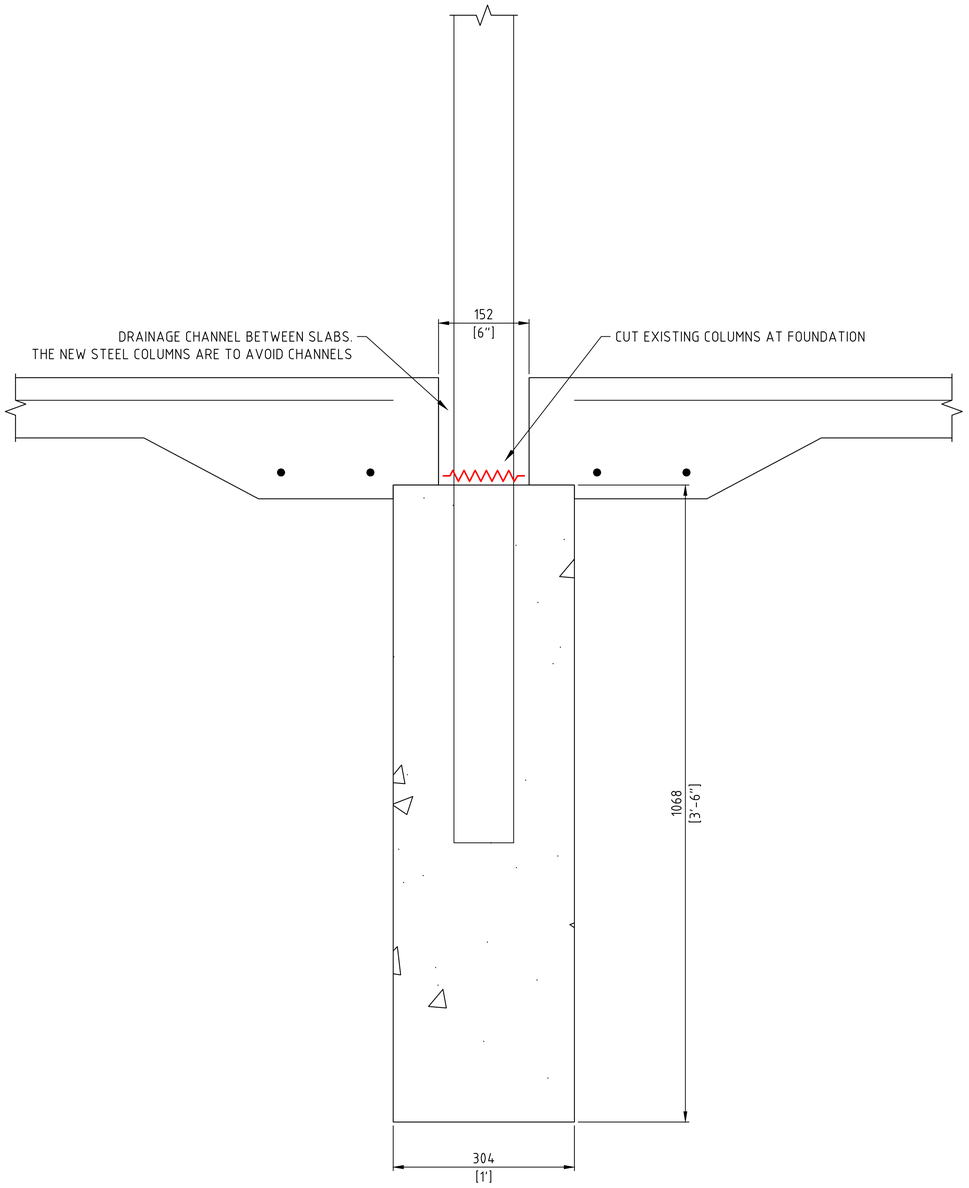

EXISTING POST ANCHORAGE DETAIL

1:5

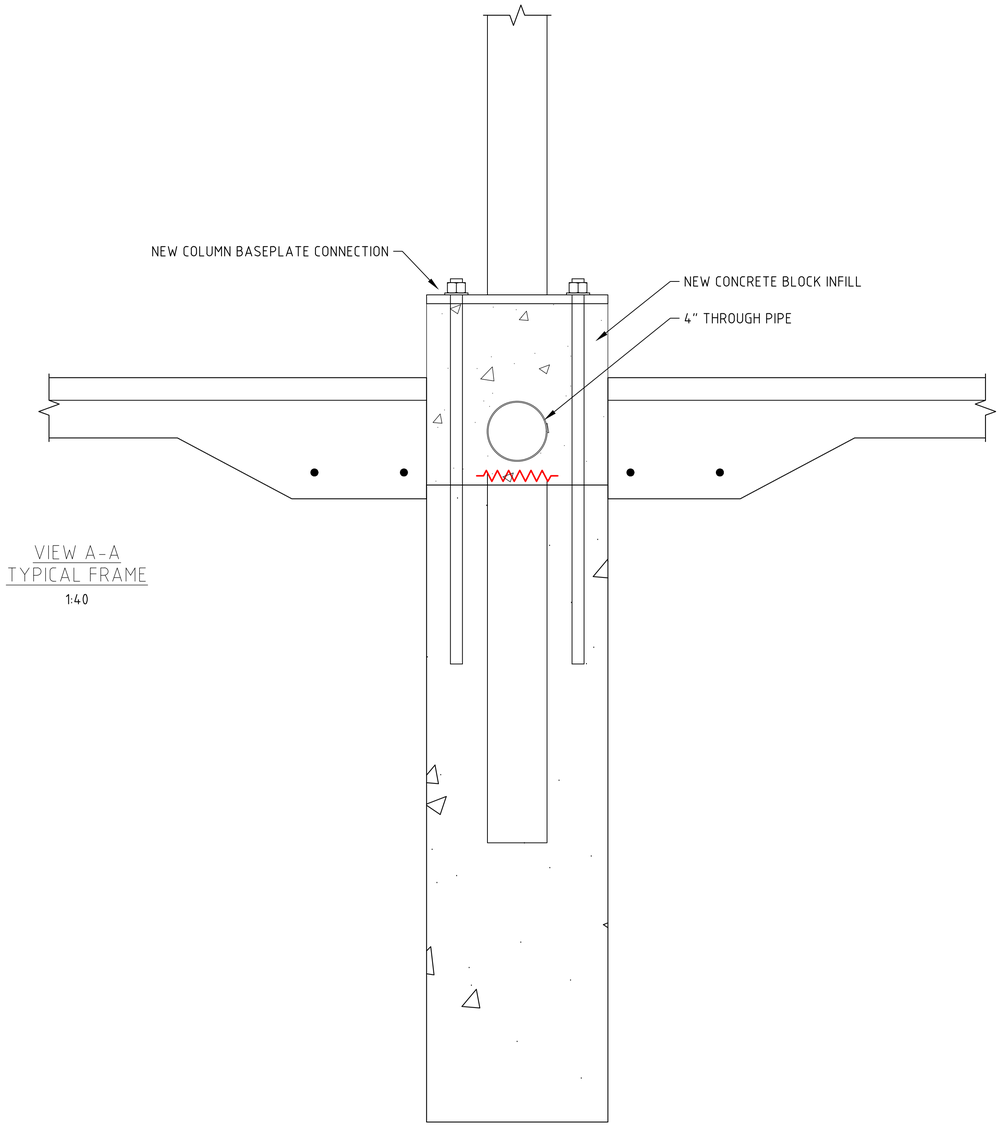

VIEW A-A
TYPICAL FRAME

1:40

PROPOSED OPTION FOR POST ANCHORAGE DETAIL

1:5

THE MINISTRY OF PUBLIC WORKS

P.O. Box HM525
Hamilton HMCX Bermuda
Phone: (441) 295-5151

DEPARTMENT OF WORKS AND ENGINEERING

Fax: (441) 295-5658

ISSUED FOR: FOR INFORMATION

AMENDMENTS:

NO	REVISION	BY	APP	DATE
A	ISSUED FOR INFORMATION	CF	–	07/05/25

SCALE: .

SURVEY
PREPARED BY: . DATE: .

DESIGN
PREPARED BY: . DATE: .
CHECKED BY: . DATE: .

DRAWING
PREPARED BY: C FRASER DATE: 05/05/25
CHECKED BY: . DATE: .

APPROVED BY: . DATE: .

PROJECT NUMBER: .

PROJECT NAME:

TULO VALLEY GREENHOUSE

PEMBROKE

SHEET TITLE:

FOUNDATION DETAIL EXISTING AND PROPOSED

SHEET NUMBER: S004

REVISION: A